ACCESSORIES CATALOG PRECISION MEASURING CENTERS

VALID FROM SEPTEMBER 2018

KLINGELNBERG

INNOVATIONS MADE BY KLINGELNBERG

Leading the market in gearing technology – with tradition, expertise and passion

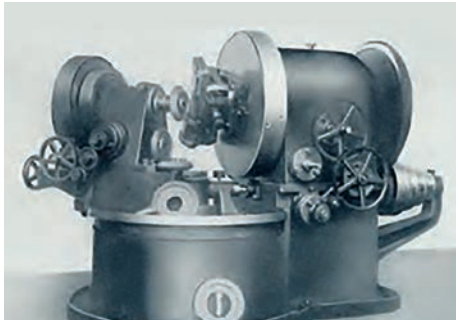

The first hobbing machine built at the Hückeswagen plant, model FK 150, construction year 1923

The Klingelnberg Group is a leading company in the gearing industry. This includes developing and manufacturing machines for bevel gear and cylindrical gear machining and precision measuring centers for axially symmetrical components and gearing. We also manufacture spiral-cut bevel gears to customer specifications – with ultimate precision using in-house technology.

The origins of this machine manufacturer date back to 1863. Still today, the Klingelnberg family remains invested in the company as an anchor shareholder. The path from the company's origins to global market leadership has been shaped by a continuous striving toward first-rate quality and absolute reliability, both for products and service. With numerous R&D engineers worldwide and more than 200 registered patents, the company demonstrates its capacity for innovation each and every day.

Klingelnberg operates engineering and manufacturing facilities in Switzerland, Germany, and Hungary. Furthermore, we guarantee our global presence with regional sales and service offices. The DIN EN ISO 9001 and DIN EN ISO 14001 certifications and participation in the VDMA's "Blue Competence" initiative underscore our sustainable and environmentally sound business practices.

A leader in gear measuring technology for future-proof quality management of drive elements

Stringent precision requirements for gearing measurements and increasingly complex drive components demand the best measuring technology available and a machine and software concept optimized for these applications. That's why leading manufacturers put their trust in Klingelnberg precision measuring centers, which represent the most widely used standard in the industry, while also serving as the reference for metrology institutes.

Klingelnberg precision measuring centers (P-series) already accommodate the majority of measurement tasks in a broad range of industries. Users in the automotive and commercial vehicle industries, the aerospace and aeronautical engineering industries, as well as the wind power industry rely on this technology, which replaces up to six conventional measuring devices. This allows the following measurement tasks to be fully automated in a single setup:

- Gear measurement
- General coordinate measurement
- Form and position measurement
- Roughness measurement
- Contour measurement
- Optical measurement

KLINGELNBERG P 65

The modular concept used in the P-series offers precision measuring centers in just the right size with a broad range of applications to provide the utmost in accuracy:

- Precision measuring centers for workpieces up to 3800 mm in diameter and up to 20,000 kg in weight
- Gear measurements starting from a module of 0.1 mm

GEAR MEASUREMENT

Precise manufacturing of premium products

For decades, Klingelnberg precision measuring centers stand for accuracy, robustness and durability. Systematic advancement and innovative capacity on the part of the machine manufacturer have turned "gear measuring devices" into multifunctional, multi-sensor precision measuring centers. Consequently, almost any measurement task involving axially symmetrical components can be performed today – thanks to an extensive range of accessories.

The importance of surface quality has increased significantly in terms of gearing as well for as other machine elements. With the P-series from Klingelnberg, surface roughness on external and internal gearing can be measured, evaluated and documented in a fully automatic process, starting from modules as small as 0.9 mm. Outside and inside diameters of shaft-shaped and circular components can also be measured. All Klingelnberg precision measuring centers can be equipped with various retrofit packages at the customer's request. The most recent technical highlight is Klingelnberg Optical Metrology, which can also be retrofitted on every machine in the P-series. Klingelnberg Optical Metrology is a clever combination of tactile and optical measuring technology. An extremely rapid changeover from the tactile system to the optical sensor makes this a hybrid system that combines the advantages of both measurement methods.

Klingelnberg Precision Measuring Centers

- Gear measurement for a broad range of profile types
- Bevel gear testing against target coordinates or a master gear
- Measurement of distances, angles, diameters and positions; Fourier analysis evaluation
- Form measurement such as roundness, straightness, flatness and cylindrical shape
- Complete measurement of hobs
- Measurement of shaving cutters and shaper type cutters
- Measurement of sprockets, cycloids and other gearing against coordinates
- Analysis of waviness on cylindrical gears
- Roughness measurement on gearing and axially symmetrical components
- Optical measurement on gearing and shaft-shaped components

Bevel gear

Tooth thickness

Pitch, concentricity

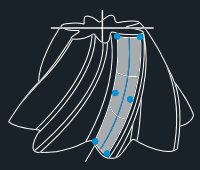

Topography

Cylindrical gear

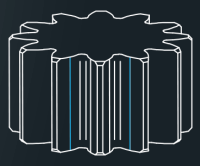

Lead line

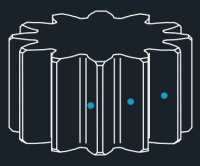

Pitch, concentricity

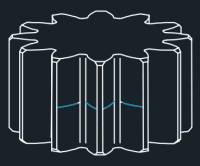

Profile

Shaft

Roundness

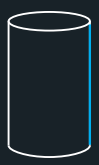

Straightness

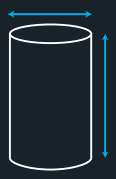

Diameter, length

Roughness

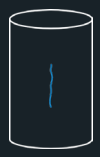

Shaft

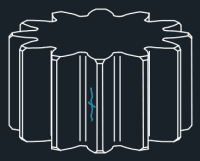

Cylindrical gear

Bevel gear

Contour

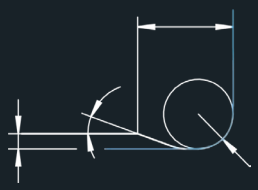

Radial and axial section scan

Tangential section scan

Normal section scan

Optical measurement

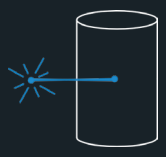

Shaft

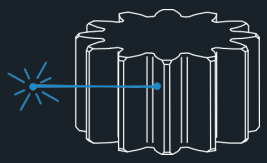

Cylindrical gear

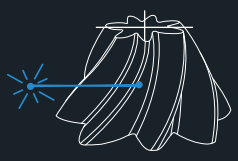

Bevel gear

SYSTEM COMPONENTS AND MODULES

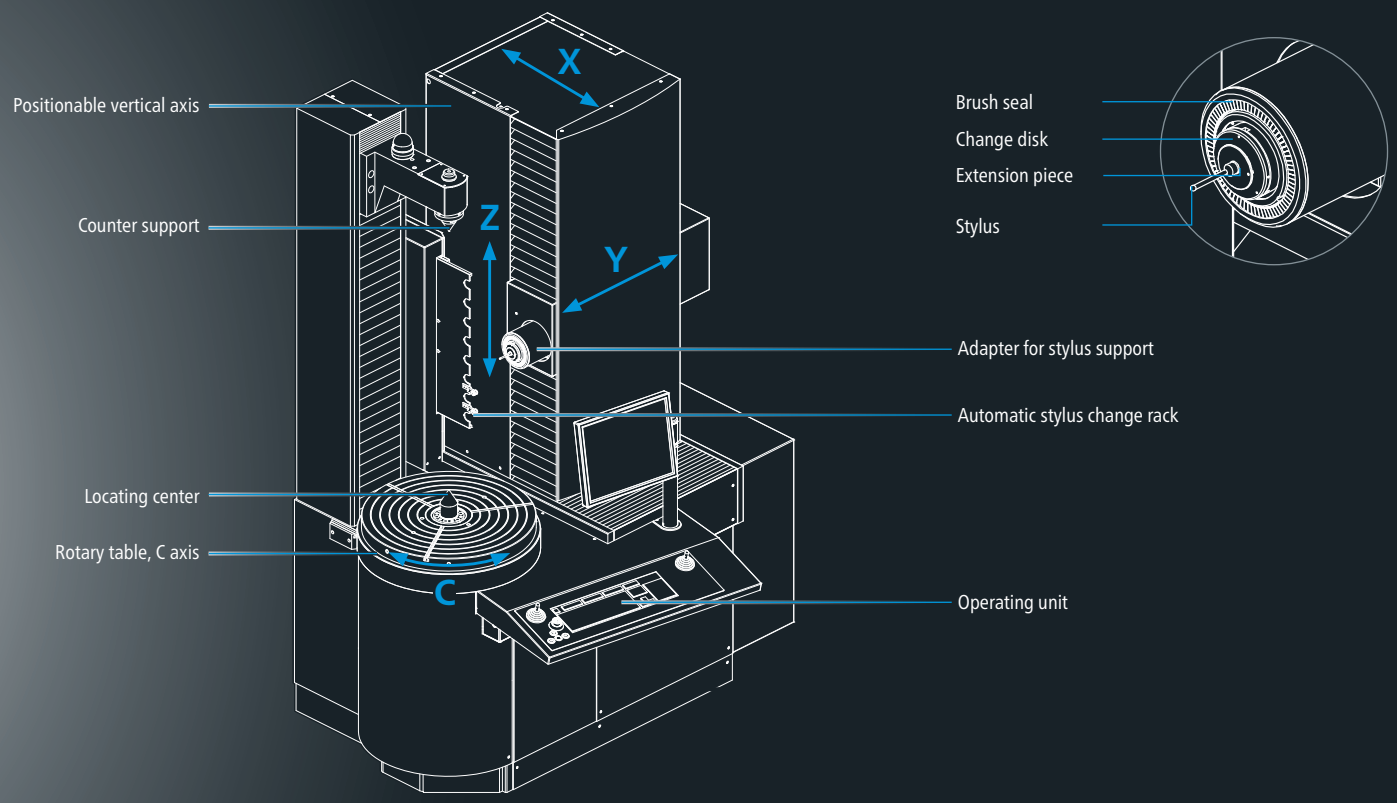

Leading technology for maximum safety and precision

A precise, heavy-duty rotary table is the central element in a precision measuring center. This rotary table is configured as a measuring axis (C axis) and provides concentric seating of the workpieces to be tested. In combination with the three linear measuring axes, tangential (X axis), radial (Y axis) and vertical (Z axis), the precision measuring centers trace and inspect the functional surfaces of gearing and general drive components in generator mode. This guarantees maximum measuring accuracy and reproducibility.

Key to symbols for the product tables

D = Diameter
d = Stylus sphere diameter
ds = Shaft diameter
ds1 = Active shaft diameter
ØD = Seating diameter for shaft
Da = Nominal diameter
L = Length
ML1 = Length of active shaft diameter
ML2 = Length of shaft diameter
ML = Total length of shaft
M5 = Metric ISO thread 5 mm

M42M = Digital rotating 2D probing system
M43M = Digital 3D probing system (locking button)
M44M = Digital 3D probing system, temperature-neutral
R = Stylus surface radius
ØA = Seating diameter for tip
W = Clamping range for shaft
B = Clamping range for bore hole
WAF = Width across flats
No. = Number
Qty. = Quantity
KL special = Special version, available only from Klingelnberg

STYLUS ELEMENTS

Stylus construction kit 09
Ball-type stylus pin 12
Ball-type stylus 13
Extension pieces (titanium 11 mm) 14
Accessories for extension pieces D = 11 mm 15
Change disks 16
Stylus holders 17
Stylus rods for internal gearing 18
Needle styluses 18
Stylus rods, special version 19
Special styluses for blades 19

ROUGHNESS SYSTEMS

Roughness styluses, angled 21
Roughness styluses for internal gearing 21

GAUGES AND STANDARDS

Stylus set-up gauge D = 15 mm 23
Stylus set-up gauge D = 5 mm 23
Stylus set-up gauge D = 2 mm 23
Gearing standard / lead standard 24
SFP standard 24
SFP multi-wave standard 24
Roughness standard 24
Seating and inspection mandrel 25

CLAMPING DEVICES, THREE-JAW QUICK-ACTION CHUCKS AND FACE PLATES

Three-jaw quick-action chuck D < 70 mm 27
Three-jaw quick-action chuck D < 125 mm 27
Three-jaw quick-action chuck D < 240 mm 27
Three-jaw quick-action chuck D < 350 mm 27
Custom chuck jaws 28
Jibs / Leveling elements 29
Face plates 29
Alignment aids 29
Clamping device, blades 30
Carriers, special carriers 30
Plug-on centers 31

ACCESSORIES

Cabinets 33
Dial indicators and connecting rods 34
Digital encoder MT12 35

SERVICE

Training 37
Recertification of standards,
arbors and calibration balls 37

STYLUS ELEMENTS

Stylus elements and extension pieces

Owing to their design and workmanship, Klingelnberg stylus elements provide key advantages compared with standard products:

- Longer service life
- Optimized shaft contours
- Less bending

And thanks to advanced machining methods, we offer superior quality with our Klingelnberg extension piece elements, along with low weight and extreme rigidity.

- Stylus construction kit
- Ball-type stylus pin
- Stylus elements
- Extension pieces (titanium 11 mm)
- Accessories for extension pieces D = 11 mm
- Stylus holder
- Stylus rods for internal gearing
- Stylus rods, special version
- Needle styluses
- Special styluses for blades

Stylus kit P 26 – P 100

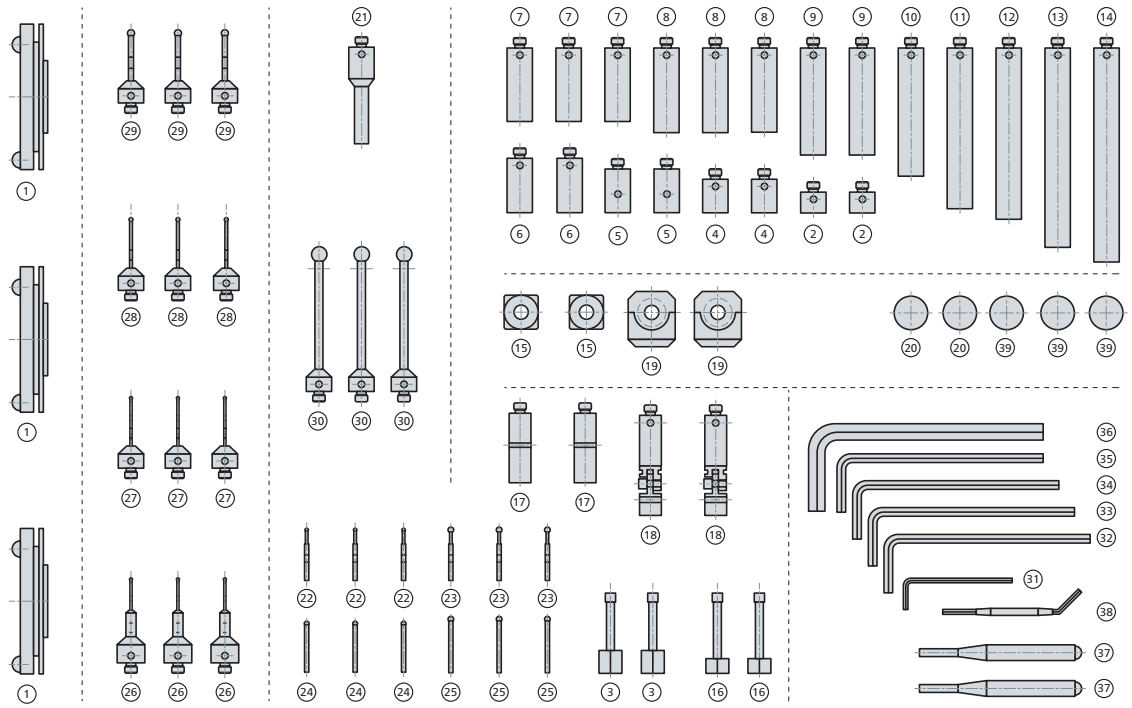

Designation	No.	Qty.	Mat. No.
Stylus kit, complete	-	1	**395450A**
Change disk	1	3	**371670A**
Extension piece 10 mm	2	2	**306604A**
Extension piece 10 mm with extended screw thread for cube	3	2	**309526A**
Extension piece 15 mm	4	2	**306605A**
Extension piece 20 mm	5	2	**306606A**
Extension piece 25 mm	6	2	**306607A**
Extension piece 35 mm	7	3	**306608A**
Extension piece 40 mm	8	3	**306609A**
Extension piece 50 mm	9	2	**306610A**
Extension piece 60 mm	10	1	**306611A**
Extension piece 75 mm	11	1	**306612A**
Extension piece 80 mm	12	1	**306613A**
Extension piece 90 mm	13	1	**306614A**
Extension piece 100 mm	14	1	**306615A**
Cube, 15 x 15 mm	15	2	**306618A**
Screw M5/L = 20 mm for cube	16	2	**393030A**
Revolving piece L = 29 mm	17	2	**395449A**
Swiveling piece	18	2	**395448A**
Angle bracket	19	2	**395170A**
Holder for ball-type stylus pin with shaft D = 1.0 mm	20	2	**365061A**

Designation	No.	Qty.	Mat. No.
Holder for ball-type stylus pin with shaft D = 1.0 mm and D = 1.5 mm	21	1	**306624A**
Ball-type stylus pin D = 0.3 mm	22	3	**397874A**
Ball-type stylus pin D = 0.5 mm	23	3	**397873A**
Ball-type stylus pin D = 1.0 mm	24	3	**365069A**
Ball-type stylus pin D = 1.5 mm	25	3	**365070A**
Ball-type stylus D = 1.0 mm	26	3	**366662A**
Ball-type stylus D = 1.5 mm	27	3	**365073A**
Ball-type stylus D = 2.0 mm	28	3	**365074A**
Ball-type stylus D = 3.0 mm	29	3	**365075A**
Ball-type stylus D = 5.0 mm	30	3	**365076A**
Offset screwdriver SW 0.9 DIN 911	31	1	**113153A**
Offset screwdriver SW 1.5 DIN 911	32	1	**055570A**
Offset screwdriver SW 2.0 DIN 911	33	1	**055571A**
Offset screwdriver SW 2.5 DIN 911	34	1	**055572A**
Offset screwdriver SW 3.0 DIN 911	35	1	**055573A**
Offset screwdriver SW 4.0 DIN 6911	36	1	**055554A**
Pin spanner 2.9 straight	37	2	**365079A**
Pin spanner 1.7 cranked	38	1	**306639A**
Holder for ball-type stylus pin with shaft D = 1.0 mm , 5-way	39	3	**395446A**

Stylus kit P 150 – P 350

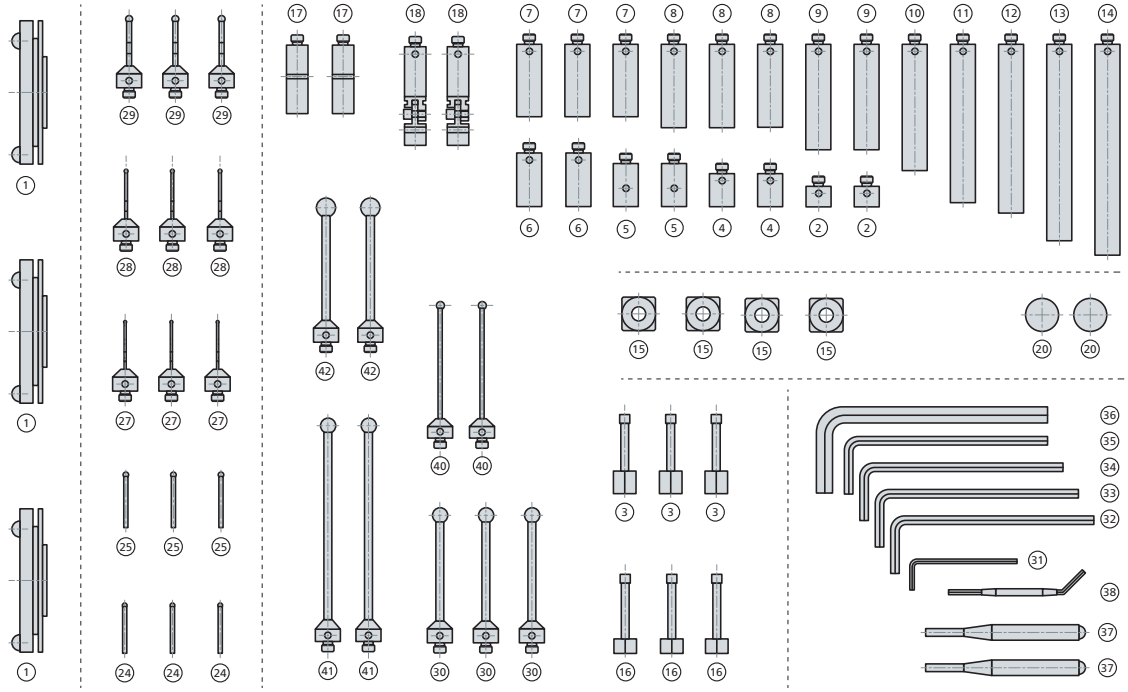

Designation	No.	Qty.	Mat. No.
Stylus kit, complete	-	1	**417450A**
Change disk	1	3	**371670A**
Extension piece 10 mm	2	2	**306604A**
Extension piece 10 mm with extended screw thread for cube	3	3	**309526A**
Extension piece 15 mm	4	2	**306605A**
Extension piece 20 mm	5	2	**306606A**
Extension piece 25 mm	6	2	**306607A**
Extension piece 35 mm	7	3	**306608A**
Extension piece 40 mm	8	3	**306609A**
Extension piece 50 mm	9	2	**306610A**
Extension piece 60 mm	10	1	**306611A**
Extension piece 75 mm	11	1	**306612A**
Extension piece 80 mm	12	1	**306613A**
Extension piece 90 mm	13	1	**306614A**
Extension piece 100 mm	14	1	**306615A**
Cube, 15 x 15 mm	15	4	**306618A**
Screw M5/L = 20 mm for cube	16	3	**393030A**
Revolving piece L = 29 mm	17	2	**395449A**
Swiveling piece	18	2	**395448A**
Holder for ball-type stylus pin with shaft D = 1.0 mm	20	2	**365061A**

Designation	No.	Qty.	Mat. No.
Ball-type stylus pin D = 1.0 mm / DS = 1.0 mm / L = 16 mm	24	3	**365069A**
Ball-type stylus pin D = 1.5 mm / DS = 1.0 mm / L = 16 mm	25	3	**365070A**
Ball-type stylus D = 1.5 mm / L = 33.5 mm	27	3	**365073A**
Ball-type stylus D = 2.0 mm / L = 33.0 mm	28	3	**365074A**
Ball-type stylus D = 3.0 mm / L = 33.5 mm	29	3	**365075A**
Ball-type stylus D = 5.0 mm / L = 53.0 mm	30	3	**365076A**
Offset screwdriver SW 0.9 DIN 911	31	1	**113153A**
Offset screwdriver SW 1.5 DIN 911	32	1	**055570A**
Offset screwdriver SW 2.0 DIN 911	33	1	**055571A**
Offset screwdriver SW 2.5 DIN 911	34	1	**055572A**
Offset screwdriver SW 3.0 DIN 911	35	1	**055573A**
Offset screwdriver SW 4.0 DIN 6911	36	1	**055554A**
Pin spanner 2.9 straight	37	2	**365079A**
Pin spanner 1.7 cranked	38	1	**306639A**
Ball-type stylus D = 3.0 mm / L = 58.0 mm	40	2	**307987A**
Ball-type stylus D = 5.0 mm / L = 75.0 mm	41	2	**411733A**
Ball-type stylus D = 7.0 mm / L = 55.0 mm	42	2	**365077A**

All dimensions in mm

Configuring stylus combinations with the Klingelnberg Stylus Manager

The modern interface of the "Stylus Manager" software supports easy configuration of stylus combinations. Stylus sphere calibration is made extremely user-friendly through the use of templates or free input.

Ball-type stylus pin

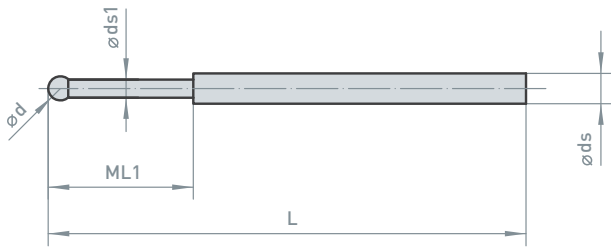

Designation	ø d	L	ø ds	ø ds1	ML1	Mat. No.	P 16	P 16 G	P 26	P 40	P 65	P 100	P 150	P 250	P 350	P 150 W	P 250 W	P 350 W
Ball-type stylus pin	0.1	15	1	KL special	-	**450196A**	•		•	•	•	•						
Ball-type stylus pin	0.2	15.2	1	KL special	-	**450122A**	•											
Ball-type stylus pin	0.3	15	1	KL special	-	**397874A**	•	•	•	•	•	•						
Ball-type stylus pin	0.5	15	1	KL special	-	**397873A**	•	•	•	•	•	•						
Ball-type stylus pin	1	16	1	0.8	5	**365069A**	•	•	•	•	•	•	•	•	•	•	•	•
Ball-type stylus pin	1.5	16	1	-	-	**365070A**	•	•	•	•	•	•	•	•	•	•	•	•
Ball-type stylus pin	0.3	3.5	1	KL special	-	**377925A**	•	•	•	•	•	•	•	•	•	•	•	•
Ball-type stylus pin	0.3	5	1	KL special	-	**377924A**	•	•	•	•	•	•	•	•	•	•	•	•
Ball-type stylus pin	0.3	7	1	KL special	-	**411714A**	•	•	•	•	•	•	•	•	•	•	•	•
Ball-type stylus pin	0.3	10	1	KL special	-	**371866A**	•	•	•	•	•	•	•	•	•	•	•	•
Ball-type stylus pin	0.5	5.5	1	KL special	-	**426386A**	•	•	•	•	•	•	•	•	•	•	•	•
Ball-type stylus pin	0.5	7	1	KL special	-	**365147A**	•	•	•	•	•	•	•	•	•	•	•	•
Ball-type stylus pin	0.5	10	1	KL special	-	**353002A**	•	•	•	•	•	•	•	•	•	•	•	•
Ball-type stylus pin	0.5	12	1	KL special	-	**452678A**	•	•	•	•	•	•	•	•	•	•	•	•
Ball-type stylus pin	0.6	15.6	1	0.4	4.6	**317513A**	•	•	•	•	•	•	•	•	•	•	•	•
Ball-type stylus pin	0.8	15.8	1	0.6	4.8	**317514A**	•	•	•	•	•	•	•	•	•	•	•	•
Ball-type stylus pin	1	21	1	0.8	5	**315322A**	•	•	•	•	•	•	•	•	•	•	•	•
Ball-type stylus pin	1	26	1	0.8	5	**346765A**	•	•	•	•	•	•	•	•	•	•	•	•
Ball-type stylus pin	1.5	26.5	1	-	-	**317515A**	•	•	•	•	•	•	•	•	•	•	•	•
Ball-type stylus pin	2	16	1	-	-	**365071A**	•	•	•	•	•	•	•	•	•	•	•	•
Ball-type stylus pin	2	27	1	-	-	**334028A**	•	•	•	•	•	•	•	•	•	•	•	•
Ball-type stylus pin	2	27	1.5	-	-	**317516A**	•	•	•	•	•	•	•	•	•	•	•	•

All dimensions in mm

Ball-type stylus

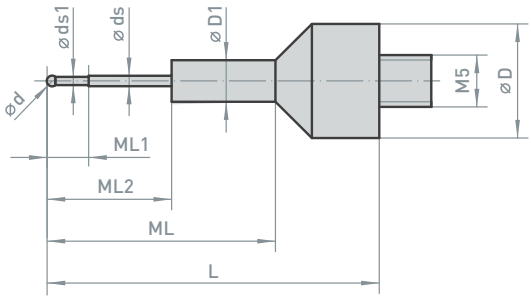

Designation	ø d	L	ML	ML1	ML2	ø D	ø D1	ø ds	ø ds1	Mat. No.	P 16	P 16 G	P 26	P 40	P 65	P 100	P 150	P 250	P 350	P 150 W	P 250 W	P 350 W
Ball-type stylus	1	32	22	4	12	11	4	1	0.8	**366662A**	•	•	•	•	•	•	•	•	•	•	•	•
Ball-type stylus	1.5	33.5	24	-	7	11	-	1.5	1	**365073A**	•	•	•	•	•	•	•	•	•	•	•	•
Ball-type stylus	2	33	23	-	-	11	-	1	-	**365074A**	•	•	•	•	•	•	•	•	•	•	•	•
Ball-type stylus	3	33.5	23.5	-	-	11	-	2	-	**365075A**	•	•	•	•	•	•	•	•	•	•	•	•
Ball-type stylus	5	53	43	-	-	11	-	3.5	-	**365076A**	•	•	•	•	•	•	•	•	•	•	•	•
Ball-type stylus	7	55	45	-	-	11	-	-	-	**365077A**	•	•	•	•	•	•	•	•	•	•	•	•
Ball-type stylus	10	65.5	-	-	-	-	-	-	-	**365078A**	•	•	•	•	•	•	•	•	•	•	•	•
Ball-type stylus	0.5	32	-	-	-	-	-	-	-	**397941A**	•	•	•	•	•	•	•	•	•	•	•	•
Ball-type stylus	0.8	22.3	-	-	-	-	-	-	-	**331192A**	•	•	•	•	•	•	•	•	•	•	•	•
Ball-type stylus	0.8	32	-	-	-	-	-	-	-	**7809803A**	•	•	•	•	•	•	•	•	•	•	•	•
Ball-type stylus	1.4	33.5	23.5	-	-	-	-	-	-	**442346A**	•	•	•	•	•	•	•	•	•	•	•	•
Ball-type stylus	1.6	33.5	23.5	-	-	-	-	-	-	**442347A**	•	•	•	•	•	•	•	•	•	•	•	•
Ball-type stylus	1.8	33.5	23.5	-	-	-	-	-	-	**442348A**	•	•	•	•	•	•	•	•	•	•	•	•
Ball-type stylus	2	61	-	-		11		1.5	-	**359314A**			•	•	•	•	•	•	•	•	•	•
Ball-type stylus	2.5	33.5	23.5	-	-	-	-	-	-	**442349A**	•	•	•	•	•	•	•	•	•	•	•	•
Ball-type stylus	3	58	48	-	-	11	-	2	-	**307987A**	•	•	•	•	•	•	•	•	•	•	•	•
Ball-type stylus	3	70	-	-	-	-	-	-	-	**411078A**			•	•	•	•	•	•	•	•	•	•
Ball-type stylus	3	100	-	-	-	-	-	-	-	**417185A**			•	•	•	•	•	•	•	•	•	•
Ball-type stylus	3.5	33.5	23.5	-	-	-	-	-	-	**442350A**	•	•	•	•	•	•	•	•	•	•	•	•
Ball-type stylus	3.7	33.5	23.5	-	-	-	-	-	-	**452730A**	•	•	•	•	•	•	•	•	•	•	•	•
Ball-type stylus	4	35	25	-	-	-	-	-	-	**442351A**	•	•	•	•	•	•	•	•	•	•	•	•
Ball-type stylus	4	35	25	-	-	-	-	-	-	**442351A**	•	•	•	•	•	•	•	•	•	•	•	•
Ball-type stylus	4	64	-	-	-	-	-	-	-	**435748A**			•	•	•	•	•	•	•	•	•	•
Ball-type stylus	4	100	-	-	-	-	-	-	-	**452933A**			•	•	•	•	•	•	•	•	•	•
Ball-type stylus	5	75	-	-	-	-	-	-	-	**411773A**			•	•	•	•	•	•	•	•	•	•
Ball-type stylus	5	100	90	-	-	11	-	3.5	-	**411747A**			•	•	•	•	•	•	•	•	•	•
Ball-type stylus	5	120	110	-	-	11	-	3.5	-	**452731A**			•	•	•	•	•	•	•	•	•	•
Ball-type stylus	5.5	53	43	-	-	11	-	3.5	-	**442354A**	•	•	•	•	•	•	•	•	•	•	•	•
Ball-type stylus	6	50	40	-	-	11	-	3.5	-	**428870A**	•	•	•	•	•	•	•	•	•	•	•	•

All dimensions in mm

Extension pieces D = 11 mm (titanium, CFRP, Nolex)

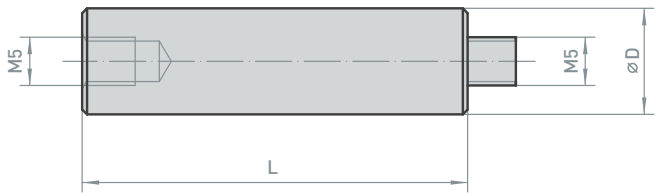

Fig.: Extension piece D = 11 mm

Designation	ø D	L	Material	Other information	Mat. No.	P 16	P 16 G	P 26	P 40	P 65	P 100	P 150	P 250	P 350	P 150 W	P 250 W	P 350 W
Extension piece	11	10	Titanium	-	**306604A**	•	•	•	•	•	•	•	•	•	•	•	•
Extension piece	11	10	Titanium	with 20 mm thread	**309526A**	•	•	•	•	•	•	•	•	•	•	•	•
Extension piece	11	15	Titanium	-	**306605A**	•	•	•	•	•	•	•	•	•	•	•	•
Extension piece	11	15	Titanium	with internal thread	**458554A**	•	•	•	•	•	•	•	•	•	•	•	•
Extension piece	11	20	Titanium	-	**306606A**	•	•	•	•	•	•	•	•	•	•	•	•
Extension piece	11	25	Titanium	-	**306607A**	•	•	•	•	•	•	•	•	•	•	•	•
Extension piece	11	30	Titanium	-	**309529A**	•	•	•	•	•	•	•	•	•	•	•	•
Extension piece	11	35	Titanium	-	**306608A**	•	•	•	•	•	•	•	•	•	•	•	•
Extension piece	11	40	Titanium	-	**306609A**	•	•	•	•	•	•	•	•	•	•	•	•
Extension piece	11	50	Titanium	-	**306610A**	•	•	•	•	•	•	•	•	•	•	•	•
Extension piece	11	55	Titanium	-	**331174A**	•	•	•	•	•	•	•	•	•	•	•	•
Extension piece	11	60	Titanium	-	**306611A**	•	•	•	•	•	•	•	•	•	•	•	•
Extension piece	11	75	Titanium	-	**306612A**	•	•	•	•	•	•	•	•	•	•	•	•
Extension piece	11	80	Titanium	-	**306613A**	•	•	•	•	•	•	•	•	•	•	•	•
Extension piece	11	90	Titanium	-	**306614A**	•	•	•	•	•	•	•	•	•	•	•	•
Extension piece	11	100	Titanium	-	**306615A**	•	•	•	•	•	•	•	•	•	•	•	•
Extension piece	11	120	Titanium	-	**306616A**			•	•	•	•	•	•	•	•	•	•
Extension piece	11	150	Titanium	-	**306617A**			•	•	•	•	•	•	•	•	•	•
Extension piece	11	200	Titanium	-	**307974A**			•	•	•	•	•	•	•	•	•	•
Extension piece	11	50	CFRP	-	**442114A**			•	•	•	•	•	•	•	•	•	•
Extension piece	11	60	CFRP	-	**442115A**			•	•	•	•	•	•	•	•	•	•
Extension piece	11	70	CFRP	-	**442116A**			•	•	•	•	•	•	•	•	•	•
Extension piece	11	100	CFRP	-	**442117A**			•	•	•	•	•	•	•	•	•	•
Extension piece	11	120	CFRP	-	**442118A**			•	•	•	•	•	•	•	•	•	•
Extension piece	11	120	CFRP	-	**442119A**			•	•	•	•	•	•	•	•	•	•
Extension piece	11	200	CFRP	-	**458135A**			•	•	•	•	•	•	•	•	•	•
Extension piece	11	250	Nolex	-	**439546A**			•	•	•	•	•	•	•	•	•	•

All dimensions in mm

Accessories for extension pieces D = 11 mm

Fig.: Revolving piece L = 29 mm (395449A)

Fig.: Swiveling piece (395448A)

Designation	ø D	L	Other information	Mat. No.	P 16	P 16 G	P 26	P 40	P 65	P 100	P 150	P 250	P 350	P 150 W	P 250 W	P 350 W
Revolving piece	11	29	See kit item 17	**395449A**	•	•	•	•	•	•	•	•	•	•	•	•
Swiveling piece	11	42.5	See kit item 18	**395448A**	•	•	•	•	•	•	•	•	•	•	•	•
Cube B = 15 mm	-	-	See kit item 15	**306618A**	•	•	•	•	•	•	•	•	•	•	•	•
Socket head screw L = 20 for cube	-	20	See kit item 16	**393030A**	•	•	•	•	•	•	•	•	•	•	•	•
Cube B = 15 mm	-	-	with counterbore	**334466A**	•	•	•	•	•	•	•	•	•	•	•	•
Socket head screw M5 x 16	-	16	DIN 6912 for 331166A	**050872A**	•	•	•	•	•	•	•	•	•	•	•	•
Angle bracket	-	-	See kit item 19	**395170A**	•	•	•	•	•	•	•	•	•	•	•	•
Angle bracket MGN 614	-	-	Function-optimized	**451082$**	•	•	•	•	•	•	•	•	•	•	•	•
Socket head screw for angle bracket M5 x 10	-	10	for 451082$	**451083$**	•	•	•	•	•	•	•	•	•	•	•	•

Change disk

Fig.: Change disk M43M/M44M

Fig.: Change disk M43M (393708A) – back

Designation	Other information	Mat. No.	P 16	P 16 G	P 26	P 40	P 65	P 100	P 150	P 250	P 350	P 150 W	P 250 W	P 350 W
Adapter	M42M	**278861A**												
Change disk	M43M	**393708A**												
Change disk	M43M, with magnetic ring	**435749$**												
Change disk	M44M	**393707A**	•	•	•	•	•	•	•	•	•	•	•	•
Change disk	M44M, high adhesion (h.a.)	**394127A**			•	•	•	•	•	•	•	•	•	•
Change disk, grinding burn	M44M	**450082$**			•	•	•	•	•	•	•			

All dimensions in mm

Stylus holders

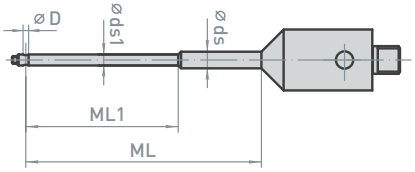

Fig.: Special stylus mounted, with extension piece and cube

Designation	ø D	ø ds	ø ds1	ML	ML1	Mat. No.	P 16	P 16 G	P 26	P 40	P 65	P 100	P 150	P 250	P 350	P 150 W	P 250 W	P 350 W
Stylus holders	1	3	2	44	29	**452889$**	•	•	•	•	•	•	•	•	•	•	•	•
Stylus holders	1	3	2	60	29	**452899$**	•	•	•	•	•	•	•	•	•	•	•	•
Stylus holders	1	-	4	45	-	**452829$**	•	•	•	•	•	•	•	•	•	•	•	•
Stylus holders	1	-	4	60	-	**458699$**	•	•	•	•	•	•	•	•	•	•	•	•
Holder for stylus for small bore holes	1 – 1.5	-	6	27	-	**306624A**	•	•	•	•	•	•	•	•	•	•	•	•
Holder for stylus 3-way	-	1	-	-	-	**365061A**	•	•	•	•	•	•	•	•	•	•	•	•
Holder for stylus 5-way	-	1	-	-	-	**395446A**	•	•	•	•	•	•	•	•	•	•	•	•

Rods and equipment

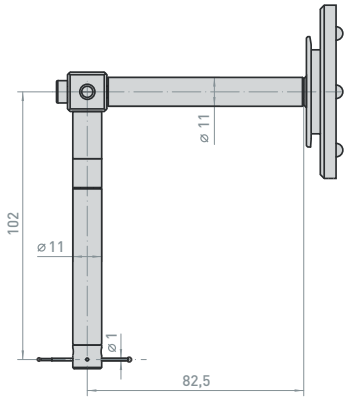

Fig.: Rod for internal gears (394486A)

Fig.: Set for measuring small modules on cylindrical gears (344735A)

Fig.: Equipment for checking diamond-coated gears (442019$)

Designation	L	d	R	Mat. No.	P 16	P 16 G	P 26	P 40	P 65	P 100	P 150	P 250	P 350	P 150 W	P 250 W	P 350 W
Ball-type stylus pin	16	0.1	-	**450466$**	•	•	•	•	•							
Rod for internal gears (for Ball-type stylus pins)	-	-	-	**394486A**			•	•	•	•	•	•	•	•	•	•
Rod	-	-	-	**394734A**					•	•	•	•	•	•	•	•
Device for checking small modules (needle stylus)	-	-	-	**344735A**	•		•	•	•	•						
Measuring stylus tip (needle stylus)	20	-	0.05	**344839A**	•		•	•	•	•						
Equipment for checking diamond-coated gears including the following items: 279143A, 281785A, 279144A, 271786A, 306603A	-	-	-	**442019$**	•		•	•	•	•						
Cross-cutting stylus, movable	35	1	-	**279143A**	•		•	•	•	•						
Ball-type stylus pin	35	1	-	**281785A**	•		•	•	•	•						
Cross-cutting stylus, movable	35	1.5	-	**279144A**	•		•	•	•	•						
Ball-type stylus pin	35	1.5	-	**281786A**	•		•	•	•	•						
Adapter F.KL DS = 4 mm stylus	-	-	-	**306603A**	•		•	•	•	•						

All dimensions in mm

Carbon rods (CFRP)

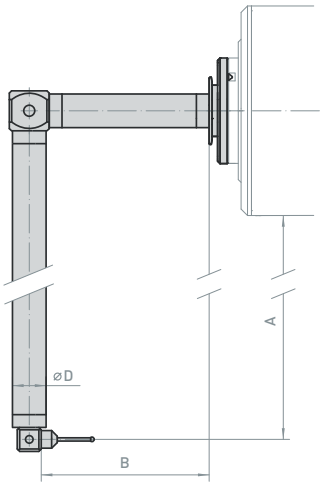

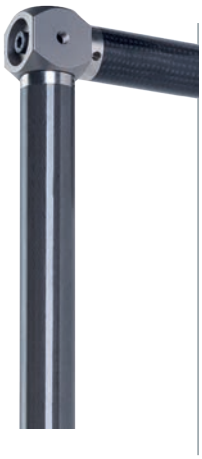

Fig.: CFRP internal gear rod (371837A)

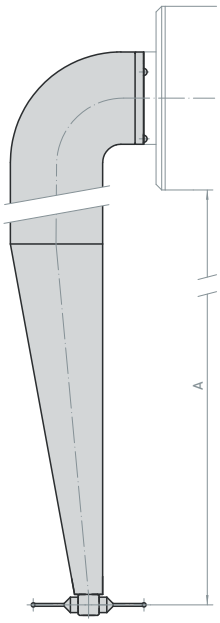

Fig.: CFRP internal gear rod 500 (372303A)

Designation	L	D	Plunge depth A	Distance to change disk B	Mat. No.	P 16	P 16 G	P 26	P 40	P 65	P 100	P 150	P 250	P 350	P 150 W	P 250 W	P 350 W
CFRP int. gear. rod	-	21	265	105	**371837A**					•	•	•					
CFRP int. gear. rod	-	21	265	5	**377547A**								•	•			
CFRP int. gear. rod	-	21	365	105	**371978A**					•	•	•					
CFRP int. gear. rod	-	21	365	5	**377549A**								•	•			
CFRP extension piece	50	21	-	-	**458128A**					•	•	•	•	•			
CFRP extension piece	100	21	-	-	**315303A**					•	•	•	•	•			
CFRP extension piece	100	21	-	-	**372221A**					•	•	•	•	•			
CFRP extension piece	120	21	-	-	**359993A**					•	•	•	•	•			
CFRP extension piece	150	21	-	-	**421113A**					•	•	•	•	•			
CFRP extension piece	175	21	-	-	**418986A**					•	•	•	•	•			
CFRP extension piece	250	21	-	-	**450231A**					•	•	•	•	•			
CFRP extension piece	300	21	-	-	**315302A**							•	•	•			
CFRP extension piece	300	21	-	-	**458123A**							•	•	•			
CFRP extension piece	400	21	-	-	**334416A**							•	•	•			
CFRP int. gear. rod (carbon rod, special stylus)	500	-	580	-	**372303A**							•	•	•			

Special styluses for blades, stylus sets

Designation	L	D	Mat. No.	P 16	P 16 G	P 26	P 40	P 65	P 100	P 150	P 250	P 350	P 150 W	P 250 W	P 350 W
Stylus set, complete	60	3	**425532A**			•	•	•	•						
Stylus set, complete	80	5	**398205A**			•	•	•	•						

Fig.: Complete stylus set in storage box (425532A)

ROUGHNESS STYLUS SYSTEMS

Roughness stylus systems

The surface quality of gearing and bearing surfaces is increasingly coming into focus due to steadily growing requirements for load capacity, service life and noise.

Roughness stylus systems for external and internal surfaces as well as gearing provide optimal prerequisites for measuring surface roughness reliably, reproducibly and fully automatically.

- Roughness styluses
- Roughness styluses, angled
- Roughness styluses for internal gearing

Skid roughness stylus systems

Fig.: Roughness stylus, straight (458716$)

Fig.: Roughness stylus, angled (458721$)

Fig.: Roughness stylus for internal gearing (471092$)

Designation	Module	Stylus tip	Mat. No.	P 16	P 16 G	P 26	P 40	P 65	P 100	P 150	P 250	P 350	P 150 W	P 250 W	P 350 W
Roughness stylus, straight	2 mm – 12 mm	0.005 mm	**458716$**	•	•	•	•	•	•	•	•	•			
Skid stylus system	2 mm – 12 mm	0.002 mm	**458717$**	•	•	•	•	•	•	•	•	•			
Roughness stylus, straight	10 mm – 22 mm	0.005 mm	**458719$**			•	•	•	•	•	•	•			
Roughness styluses	10 mm – 22 mm	0.002 mm	**458720$**			•	•	•	•	•	•	•			
Roughness stylus, straight	0.9 mm – 3 mm	0.002 mm	**458718$**	•	•	•	•	•	•	•	•	•			
Roughness stylus, angled	2 mm – 12 mm	0.005 mm	**458721$**	•		•	•	•	•	•	•	•			
Roughness stylus, angled	2 mm – 12 mm	0.002 mm	**458722$**	•		•	•	•	•	•	•	•			
Roughness stylus, angled	10 mm – 22 mm	0.005 mm	**458723$**					•	•	•	•	•			
Roughness stylus, angled	10 mm – 22 mm	0.002 mm	**458724$**					•	•	•	•	•			
Roughness styluses for internal gearing	0.9 mm – 3 mm	0.002 mm	**471092$**			•	•	•	•	•	•	•			

GAUGES AND STANDARDS

Gauges and standards

For years, the traceability of measuring results to certified standards has been a guarantee for the absolute precision of the measurement. Ease of use of the involute and lead standards, as well as the pitch standards and dimension, form, and position standards, ensures proper qualitative and quantitative quality monitoring. Using certified standards, the positions and probing errors of stylus elements are checked and calibrated at regular intervals to reliably detect and eliminate temporary environmental and wear influences.

- Stylus set-up gauge D = 15 mm
- Stylus set-up gauge D = 5 mm
- Stylus set-up gauge D = 2 mm
- Gearing standard / lead standard
- Pitch standard
- SFP standard
- SFP multi-wave standard
- Standard for rotary table guide
- Roughness standard
- Seating and inspection mandrel

Stylus set-up gauge

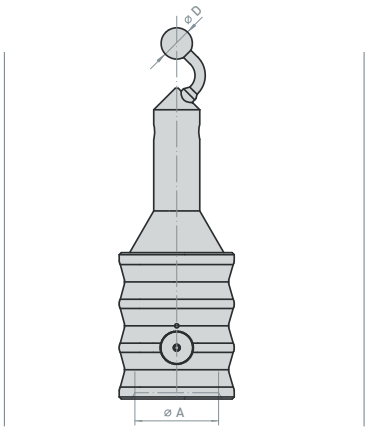

Fig.: Stylus set-up gauge D = 15 mm (458095$)

Fig.: Stylus set-up gauge D = 5 mm (439606$)

Fig.: Stylus set-up gauge D = 2 mm (458423$)

Stylus set-up gauge D = 15 mm

Designation	Seating ø A	Ball ø D	Mat. No.	P 16	P 16 G	P 26	P 40	P 65	P 100	P 150	P 250	P 350	P 150 W	P 250 W	P 350 W
Stylus set-up gauge ball 15 w. certificate for chuck P 16	-	15	**458095$**	•	•										
Stylus set-up gauge ball 15 w. certificate for center	40	15	**353086A**			•	•								
Stylus set-up gauge ball 15 w. certificate for center	60	15	**394706A**					•	•						
Stylus set-up gauge ball 15 w. certificate for center	70	15	**435774$**							•	•	•	•	•	•

Stylus set-up gauge D = 5 mm

Designation	Seating ø A	Ball ø D	Mat. No.	P 16	P 16 G	P 26	P 40	P 65	P 100	P 150	P 250	P 350	P 150 W	P 250 W	P 350 W
Stylus set-up gauge ball 5 w. certificate for chuck P 16	-	5	**458096$**	•	•										
Stylus set-up gauge ball 5 w. certificate for center	40	5	**354067A**			•	•								
Stylus set-up gauge ball 5 w. certificate for center	60	5	**371907A**					•	•						

Stylus set-up gauge D = 2 mm

Designation	Seating ø A	Ball ø D	Mat. No.	P 16	P 16 G	P 26	P 40	P 65	P 100	P 150	P 250	P 350	P 150 W	P 250 W	P 350 W
Stylus set-up gauge ball 2 w. certificate for chuck P 16	-	2	**458423$**	•	•										
Stylus set-up gauge ball 2 w. certificate for center	40	2	**439606$**			•	•								
Stylus set-up gauge ball 2 w. certificate for center	60	2	**439605$**					•	•						

Standards for involutes and leads / SFP standards / roughness standard

Fig.: Standard for involutes and leads, type 100 (353173A)

Fig.: Standard for involutes and leads, type 200 (353160A)

Fig.: Extended SFP reference standard (458163$)

Designation	Seating ø A	Ball ø D	Mat. No.	P 16	P 16 G	P 26	P 40	P 65	P 100	P 150	P 250	P 350	P 150 W	P 250 W	P 350 W
Standard f. involutes and leads, type 100	-	-	**353173A**	•		•	•	•							
Standard f. involutes and leads, type 200	-	-	**353160A**						•	•	•	•	•	•	•
SFP reference standard with certificate			**458424$**												
Extended SFP reference standard with certificate	-	-	**458163$**	•	•	•	•	•	•	•	•	•	•	•	•
Roundness reference standard	40	15	**458432$**			•	•								
Roundness reference standard	60	15	**458433$**					•	•						

Roughness standard

Designation	Roughness value	Mat. No.	P 16	P 16 G	P 26	P 40	P 65	P 100	P 150	P 250	P 350	P 150 W	P 250 W	P 350 W
Roughness standard compl. with case	Ra 0.5	**435647$**	•	•	•	•	•	•	•	•	•	•	•	•
Roughness standard compl. with case	Ra 3.0	**458433$**	•	•	•	•	•	•	•	•	•	•	•	•

All dimensions in mm

Acceptance and inspection mandrel

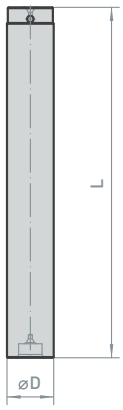

Fig.: Inspection mandrel

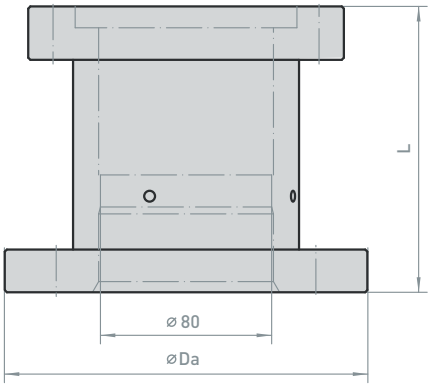

Fig.: Adapter for on-the-fly seating

Designation	L	Da	Mat. No.	P 16	P 16 G	P 26	P 40	P 65	P 100	P 150	P 250	P 350	P 150 W	P 250 W	P 350 W
Inspection mandrel with certificate (Z axis 400)	450	60	**445399$**			•	•								
Inspection mandrel with certificate (Z axis 550)	600	60	**445400$**			•	•	•	•						
Inspection mandrel with certificate (Z axis 700)	750	60	**445401$**				•	•	•						
Inspection mandrel with certificate (Z axis 850)	900	60	**445402$**					•	•						
Inspection mandrel with certificate (Z axis 1250)	1360	150	**445403$**							•	•	•	•	•	•
Inspection mandrel with certificate (Z axis 1500)	1665	150	**445404$**							•	•	•	•	•	•
Inspection mandrel with certificate (Z axis 2000)	2165	150	**445405$**							•	•	•	•	•	•
Adapter for on-the-fly seating with center (P 150 – P 350)	134	150	**421230A**							•	•	•	•	•	•
Adapter for on-the-fly seating without center (P 150 – P 350)	174	150	**395947A**							•	•	•	•	•	•

CLAMPING DEVICES, THREE-JAW QUICK-ACTION CHUCKS AND FACE PLATES

Clamping devices, three-jaw quick-action chucks and face plates

A secure, quick and precise workpiece fixture for the measurement is becoming increasingly important, given that measurement times are continually decreasing as a result of innovative software solutions. Reducing set-up times is a key measure for minimizing floor-to-floor times.

- Three-jaw quick-action chuck D < 70 mm
- Three-jaw quick-action chuck D < 125 mm
- Three-jaw quick-action chuck D < 240 mm
- Three-jaw quick-action chuck D < 350 mm
- Three-jaw quick-action chuck with special jaws
- Jibs / leveling elements
- Face plates
- Alignment aids
- Clamping device, blades
- Carriers, special carriers
- Special center, bottom

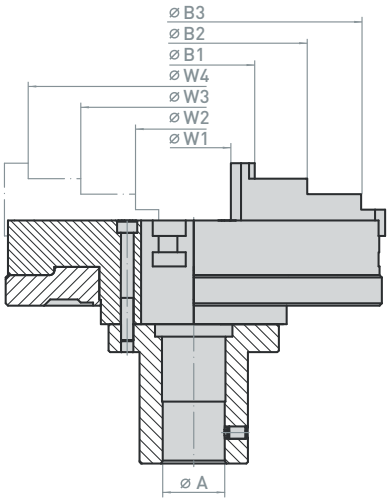

Fig.: Three-jaw quick-action chucks 70

Fig.: Three-jaw quick-action chucks 125

Fig.: Three-jaw quick-action chucks 240

Three-jaw quick-action chuck 34 and 70

Designation	Seating ø A	W1	W2	W3	B1	B2	Mat. No.	P 16	P 16 G	P 26	P 40	P 65	P 100	P 150	P 250	P 350	P 150 W	P 250 W	P 350 W
Three-jaw quick-action chuck 34 DBF	-	-	-	-	-	-	**450197A**	•	•	•	•	•	•						
Three-jaw quick-action chuck 70 DBF VA with adapter	40	2 - 27	21 - 46	39 - 64	17 - 42	35 - 60	**445499$**			•	•								
Three-jaw quick-action chuck 70 DBF VA with adapter	60	2 - 27	21 - 46	39 - 64	17 - 42	35 - 60	**450002$**					•	•						

Three-jaw quick-action chuck 125

Designation	Seating ø A	W1	W2	W3	B1	B2	Mat. No.	P 16	P 16 G	P 26	P 40	P 65	P 100	P 150	P 250	P 350	P 150 W	P 250 W	P 350 W
Three-jaw quick-action chuck 125 DBF VA with adapter	40	3 - 54	30 - 81	67 - 120	32 - 83	69 - 120	**445494$**			•	•								
Three-jaw quick-action chuck 125 DBF VA with adapter	60	3 - 54	30 - 81	67 - 120	32 - 83	69 - 120	**450001$**					•	•						

Three-jaw quick-action chuck 240

Designation	Seating A	W1	W2	W3	W4	B1	B2	B3	Mat. No.	P 16	P 16 G	P 26	P 40	P 65	P 100	P 150	P 250	P 350	P 150 W	P 250 W	P 350 W
Three-jaw quick-action chuck 240 DBF VA with adapter	40	4 - 120	40 -152	108 - 122	176 - 292	38 - 152	106 - 222	176 - 292	**366816A**			•	•								
Three-jaw quick-action chuck 240 DBF VA with adapter	60	4 -120	40 -152	108 - 122	176 - 292	38 - 152	106 - 222	176 - 292	**366815A**					•	•						

Three-jaw quick-action chuck 350

Designation	Seating ø A	W1	W2	W3	W4	B1	B2	B3	Mat. No.	P 16	P 16 G	P 26	P 40	P 65	P 100	P 150	P 250	P 350	P 150 W	P 250 W	P 350 W
Three-jaw quick-action chuck 350 DBF VA with adapter	60	4 - 200	85 - 229	153 - 297	227 - 371	40 - 177	111 - 253	261 - 404	**452801$**					•	•						

Three-jaw quick-action chuck with special jaws

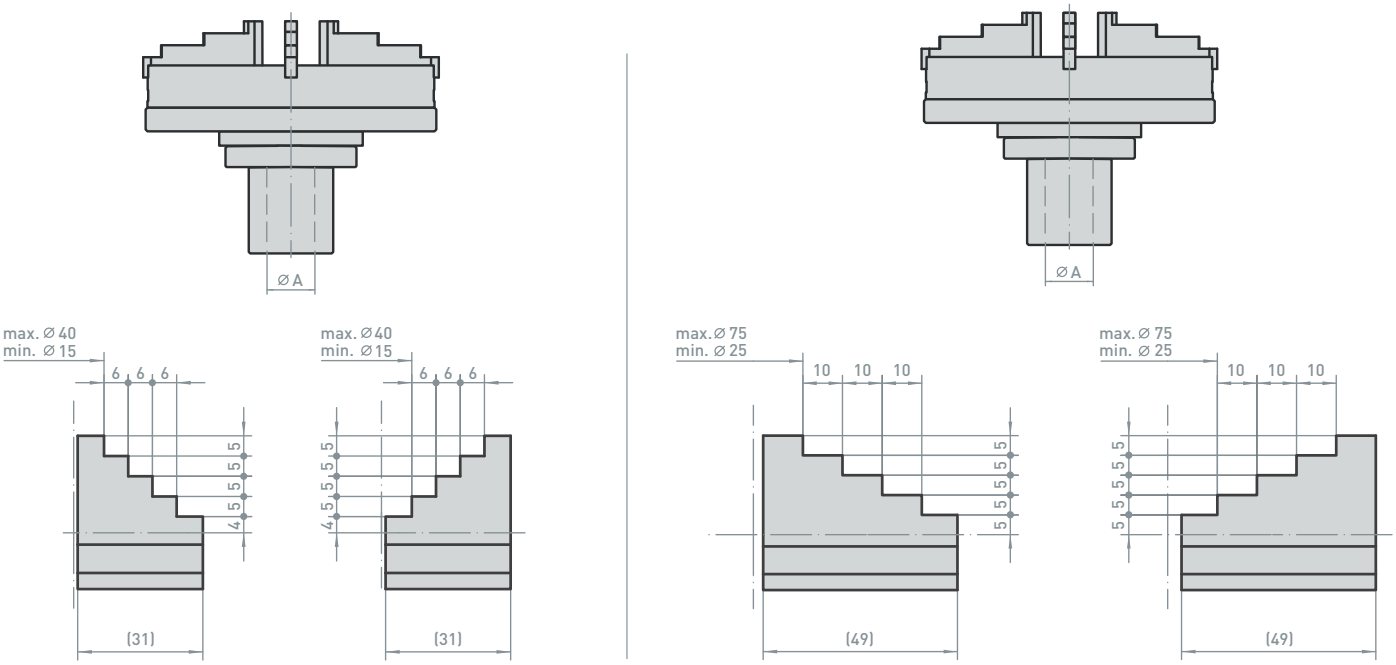

Designation	Seating ø A	Mat. No.	P 16	P 16 G	P 26	P 40	P 65	P 100	P 150	P 250	P 350	P 150 W	P 250 W	P 350 W
Three-jaw quick-action chuck D = 70 with special jaws	40	**393331A**		•	•									
Three-jaw quick-action chuck D = 125 with special jaws	40	**393332A**		•	•									
Three-jaw quick-action chuck D = 125 with special jaws	60	**417333A**				•	•							

All dimensions in mm

Jibs / leveling elements

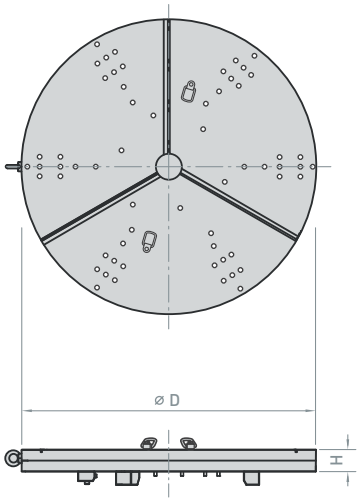

Fig.: Face plates

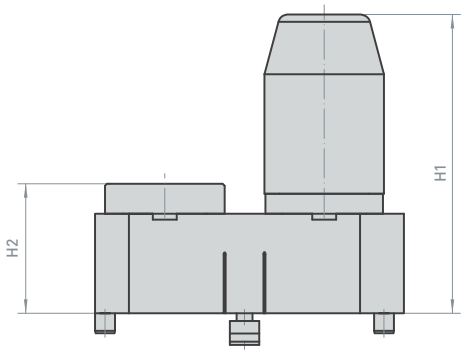

Fig.: Centering support compl. P 150 – P 350 (417213A)

Jibs

Designation	Mat. No.	P 16	P 16 G	P 26	P 40	P 65	P 100	P 150	P 250	P 350	P 150 W	P 250 W	P 350 W
Jib U30	**307880A**						•						
Leveling shoe	**256661A**			•	•								
Jib f. U31 – 33 with coupling device	**417462A**							•	•	•	•	•	•

Face plates

Designation	D	H	Mat. No.	P 16	P 16 G	P 26	P 40	P 65	P 100	P 150	P 250	P 350	P 150 W	P 250 W	P 350 W
Face plate U32	1500	80	**417213A**							•	•	•	•	•	•
Face plate U33	2000	150	**417122A**								•	•	•	•	•
Face plate U31	3000	180	**417258A**									•	•	•	•

Alignment aids

Designation	Mat. No.	P 16	P 16 G	P 26	P 40	P 65	P 100	P 150	P 250	P 350	P 150 W	P 250 W	P 350 W
Centering support compl. P 150 – P 350, set with 3 items (3 x 411471A)	**417213A**							•	•	•	•	•	•
Centering support compl. P 65 – P 100L, set with 3 items (3 x 128577$)	**428577$**					•	•						

Clamping device for stick blades

Fig.: Equipment for stick blades, Meteorit (450338$)

Fig.: Carrier for P 26 / P 40 (353181A)

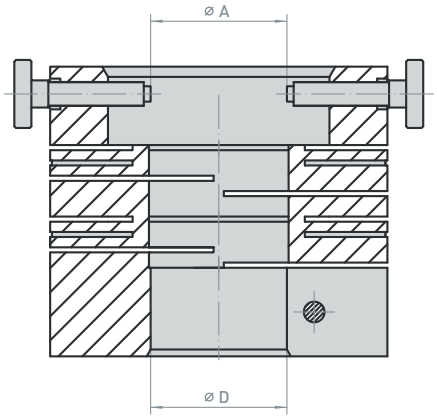

Designation	Seating ø A	Mat. No.	P 16	P 16 G	P 26	P 40	P 65	P 100	P 150	P 250	P 350	P 150 W	P 250 W	P 350 W
Equipment for stick blades, Meteorit	For center D = 40	**450338$**			•	•								
Equipment for stick blades, Meteorit	For center D = 60	**450339$**					•	•						

Carrier

Designation	A	D	Mat. No.	P 16	P 16 G	P 26	P 40	P 65	P 100	P 150	P 250	P 350	P 150 W	P 250 W	P 350 W
Carrier for P 26 / P 40	0 – 40	40	**312826A**			•	•								
Carrier for P 26 / P 40	40 – 60	40	**331124A**			•	•								
Carrier for P 26 / P 40	60 – 100	40	**353181A**			•	•								
Carrier for P 65 – P 100L	0 – 60	60	**359462A**					•	•						
Carrier for P 65 – P 100L	60 – 100	60	**359171A**					•	•						
Carrier for Reishauer grinding w. for P 26/P 40	65	40	**315009A**			•	•								

All dimensions in mm

Plug-on centers

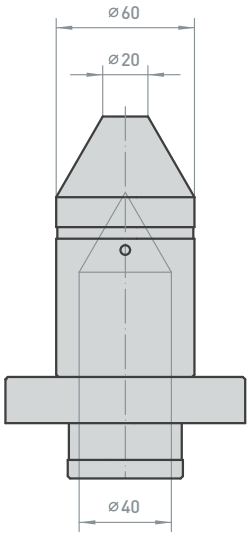

Fig.: Plug-on center paired
w. machine center D = 60 (450366$)

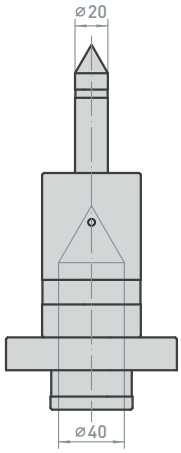

Fig.: Plug-on center paired
w. machine center D = 20 (439737$)

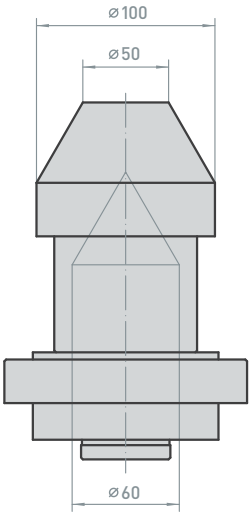

Fig.: Plug-on center paired
w. machine center D = 100 (424720A)

Designation	Mat. No.	P 16	P 16 G	P 26	P 40	P 65	P 100	P 150	P 250	P 350	P 150 W	P 250 W	P 350 W
Plug-on center paired w. machine center Plug-on center 959.020.066 D = 60 flat-topped D = 20 Machine center 962.011.001 D = 40	**450366$**			•	•								
Plug-on center paired w. machine center Plug-on center 959.020.121 D = 20 Machine center 962.011.001 D = 40	**439737$**			•	•								
Plug-on center paired w. machine center Plug-on center 964.040.020 D = 100 flat-topped D = 50 Machine center 964.011.001 D = 60	**424720A**					•	•						

ACCESSORIES

Accessories

Proper storage of accessories and wear parts is equally of extreme importance. Improper storage can quickly involve costs and result in damage that usually exceeds the purchase cost for safe storage.

- Cabinets
- Dial indicators and connecting rods
- MT 12

Cabinets

Fig.: Storage cabinet for retrofitting of P 26, P 40, P 65, P 100 (458859$)

Fig.: Tool cabinet for stylus rods with 30 slots (458398$)

Designation	Mat. No.	P 16	P 16 G	P 26	P 40	P 65	P 100	P 150	P 250	P 350	P 150 W	P 250 W	P 350 W
Stylus case retrofit	**458859$**			•	•	•	•						
Tool cabinet for stylus rods with 30 slots	**458398$**	•	•	•	•	•	•	•	•	•	•	•	•

Measuring rods / dial indicators

Fig.: Dial indicator stand with slide for T-grooves (426128A)

Fig.: Fisso articulated stand type 4400-45 F+S+SM (426126A)

Designation	Mat. No.	P 16	P 16 G	P 26	P 40	P 65	P 100	P 150	P 250	P 350	P 150 W	P 250 W	P 350 W
"Mikrokator" dial indicator	**458414$**	•	•	•	•	•	•	•	•	•	•	•	•
Fisso articulated stand type 4400-45 F+S+SM (standard equipment P 26/P 40)	**426126A**			•	•								
Dial indicator stand with slide for T-grooves (standard equipment P 65/P 100)	**426128A**					•	•						

All dimensions in mm

Fig.: Connecting rod for dial indicator

Fig.: "Mikrokator" dial indicator (458414$)

Designation	Mat. No.	P 16	P 16 G	P 26	P 40	P 65	P 100	P 150	P 250	P 350	P 150 W	P 250 W	P 350 W
Connecting rod for dial indicator P 100 – P 350	**424527A**						•	•	•	•			
Connecting rod for dial indicator P 150 – P 350	**439752$**						•	•	•	•			
Connecting rod for dial indicator P 150 – P 350	**393176A**						•	•	•	•			
Incremental stylus MT12*	**372368A**					•	•	•	•	•	•	•	•

*To use the MT12, the device must be fitted with an appropriate connection.
An additional counter board may also be required.

SERVICE

Always on the leading position

Klingelnberg training courses in measuring technology are offered throughout the year, either according to the training schedule or as mutually agreed.

Participants in these courses learn skills in the relevant measurement methods and the software designed for these methods. Alongside theory, participants receive practical training on current Klingelnberg precision measuring centers and specific workpieces from the production floor.

- Small groups of no more than six to eight participants
- Pool of instructors comprising 15 application engineers

Recertification of standards ensures reliable precision for production and quality management and involves routine inspection at regular intervals of calibration standards subject to high demands.

Available services:

- Recertification of gearing standards and dimension, form and position standards
- Recertification of stylus set-up gauges

Training

Designation	Art. No. Software Module	Art. No. Training	Duration
Training for clutch gearing	590.097	590.600	2 days
Training for testing of gearshift sleeves	590.098	590.602	5 days
Training for hob software	590.160	590.605	2 days
Training for shaper type cutter software	590.105	590.610	1 day
Training for shaving cutter software	590.100	590.615	1 day
Training for analysis of unknown gearing	590.095	590.616	1 day
Training for rack software	590.097	590.617	1 day
Training for worm wheel software	590.120	590.620	1 day
Training for cylindrical worm software	590.125	590.621	1 day
Training for bevel gear software, spur gearing	590.180	590.623	1 day
Training for bevel gear software, spiral gearing	590.182	590.625	3 days
Training for KOMET software	590.400	590.630	1 day
Training for METEORIT stick blade software	590.217	590.632	1 day
Training for ROTOR software	590.300	590.640	2 days
Training for curve measurement	590.280	590.645	2 days
Training for camshaft software	590.290	590.646	2 days
Training for tooth contact analysis	590.096	590.650	2 days
Training for SFP basic module	590.262	590.652	3 days
Training for SFP basic module + GEI	590.263	590.653	2 days
Training for SFP basic module + GEI + TEACH IN	590.267	590.655	5 days
Training for sprocket software	590.265	590.660	1 day
Training for “VIEWER” deviation analysis	590.093	590.670	1 day
Training for “OPTIMIZE & WAVE” deviation analysis	590.931	590.671	2 days
Training for “WAVE PRODUCT” deviation analysis	590.932	590.672	2 days
Training for “PRODUCE” deviation analysis	590.094	590.673	3 days

To schedule a date, please contact TSPI.DEU@Klingelnberg.com

Recertifications

Designation	Mat. No.
Recertification with new calibration ball D = 15	442056$
Recertification with new calibration ball D = 5	442057$
Recertification with new calibration ball D = 2	450252$
Inspection mandrel certification	353089A
Recertification lead standard type 100	331136A

KLINGELNBERG SUBSIDIARIES

- Klingelnberg headquarters
- Klingelnberg location
- Klingelnberg location with grinding service
- DKSH-Klingelnberg Service Ltd.

As a globally operating company, we are naturally also represented at important international locations for our business partners, so that you can rely on our short distances and quick solutions even in far-away places.

REQUEST FOR QUOTATION

Please fill out the form completely and legibly and return it by e-mail to: TSPI.DEU@Klingelnberg.com

The data indicated below are collected and processed in compliance with the applicable data protection law (GDPR).
For more information, read our data privacy notice at www.klingelnberg.com/en/footernavigation/protection-of-data-privacy.

Company:	Contact:
	Telephone:
Street / house number:	Fax:
Postal code / city:	E-mail:
Country:	VAT identification number.:
Customer number:	Date / signature:

❑ **Please send me a non-binding quotation for the following products:**

Quantity	Mat. No.	Designation	Page Number in Catalog

❑ **Please call me back.**

KLINGELNBERG GmbH
Peterstrasse 45
42499 Hückeswagen, Germany
Tel. +49 2192 81-0
Fax +49 2192 81-200

KLINGELNBERG Service

The Klingelnberg Group is a world leader in the development and manufacture of machines for bevel gear and cylindrical gear production, precision measuring centers for gearing and axially symmetrical components, and the production of customized high-precision drive components. In addition to the headquarters in Zurich, Switzerland, further development and production facilities are located in Hückeswagen and Ettlingen, Germany, and in Györ, Hungary.

The company also has sales offices and service centers and numerous trade representatives worldwide. On this basis, Klingelnberg offers users a comprehensive range of services for all aspects of toothed gear design, manufacturing, and quality inspection. The spectrum includes technical consulting, on-site machine acceptance, operator and software training as well as maintenance contracts.

KLINGELNBERG Solutions

Klingelnberg solutions are used in the automotive, commercial vehicle, and aviation industries, as well as in shipbuilding, the wind power industry, and the general transmission manufacturing industry. With numerous R&D engineers around the globe and over 200 registered patents, the company consistently demonstrates its capacity for innovation.

EN 09/2018 - Subject to technical modifications without notice.

KLINGELNBERG AG
Binzmühlestrasse 171
8050 Zurich, Switzerland
Tel. +41 44 278 7979
Fax +41 44 273 1594

KLINGELNBERG GmbH
Peterstrasse 45
42499 Hückeswagen, Germany
Tel. +49 2192 81-0
Fax +49 2192 81-200

KLINGELNBERG GmbH
Industriestrasse 19
76275 Ettlingen, Germany
Tel. +49 7243 599-0
Fax +49 7243 599-165

You can also find your local contact for sales advice at www.klingelnberg.com/contact/.